DS 24-02

Drawing below are shown with a Standard Daytona Aluminum Base-Frame.
For Wall-Hung or other leg options, please ignore the 7.3” frame height.

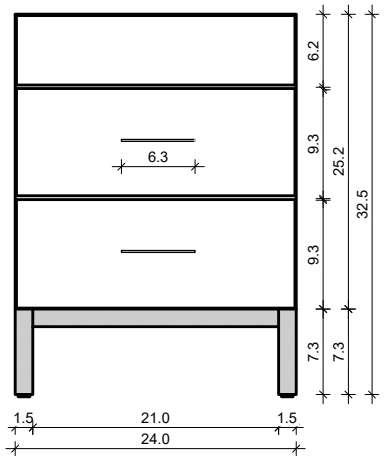

FRONT VIEW

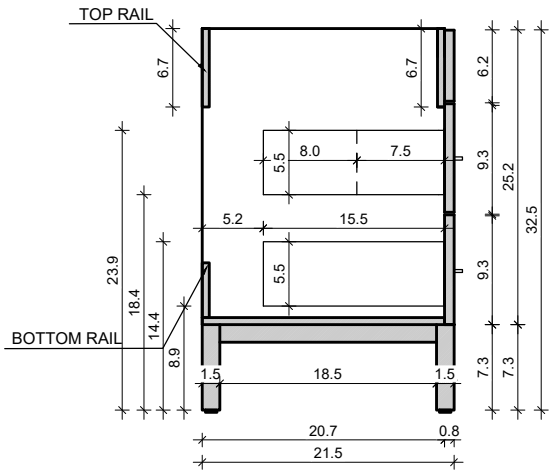

SIDE VIEW

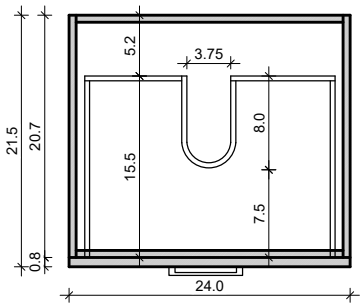

TOP VIEW

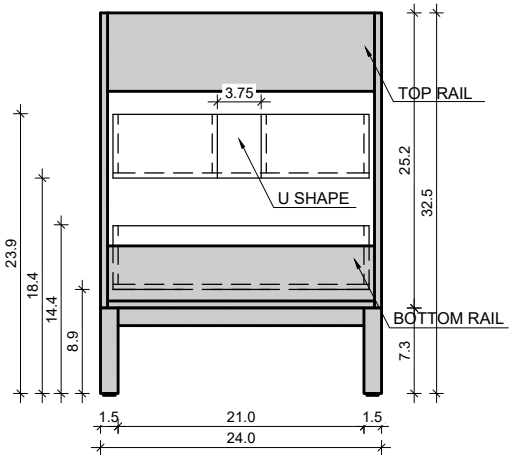

BACK VIEW