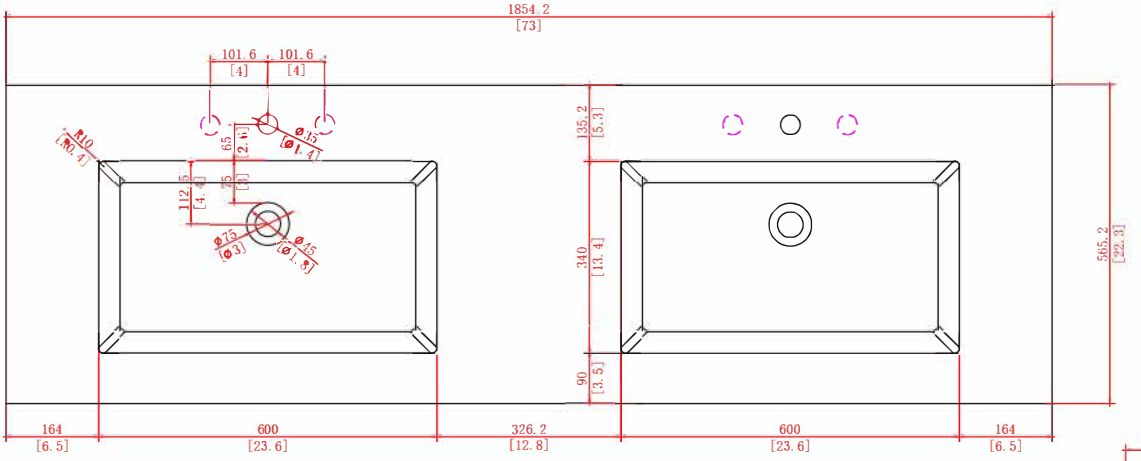
1854.2
[73]
101.6
[4]
101.6
[4]
R10
[R0.4]
65
[2.6]
Ø15
[Ø1.4]
112.5
[4.4]
75
[3]
Ø13
[Ø3]
Ø15
[Ø1.8]
135.2
[5.3]
340
[13.4]
90
[3.5]
565.2
[22.3]
164
[6.5]
600
[23.6]
326.2
[12.8]
600
[23.6]
164
[6.5]

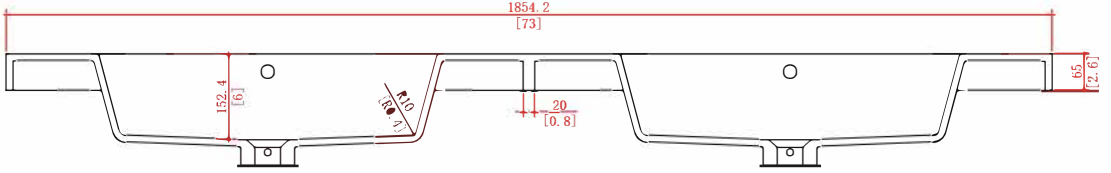
1854.2
[73]
152.4
[6]
R10
[R0.4]
20
[0.8]
65
[2.6]

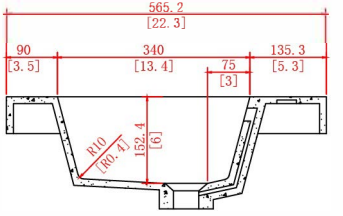
565.2
[22.3]
90
[3.5]
340
[13.4]
135.3
[5.3]
75
[3]
R10
[R0.4]
152.4
[6]

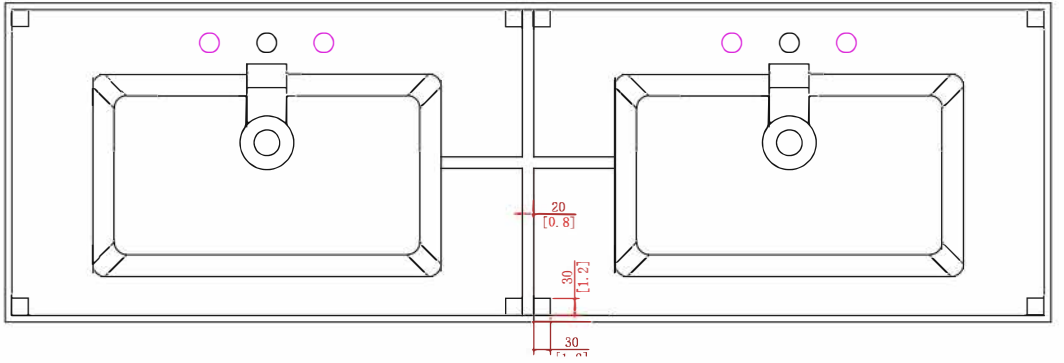
20
[0.8]
30
[1.2]
30