GE 72-04

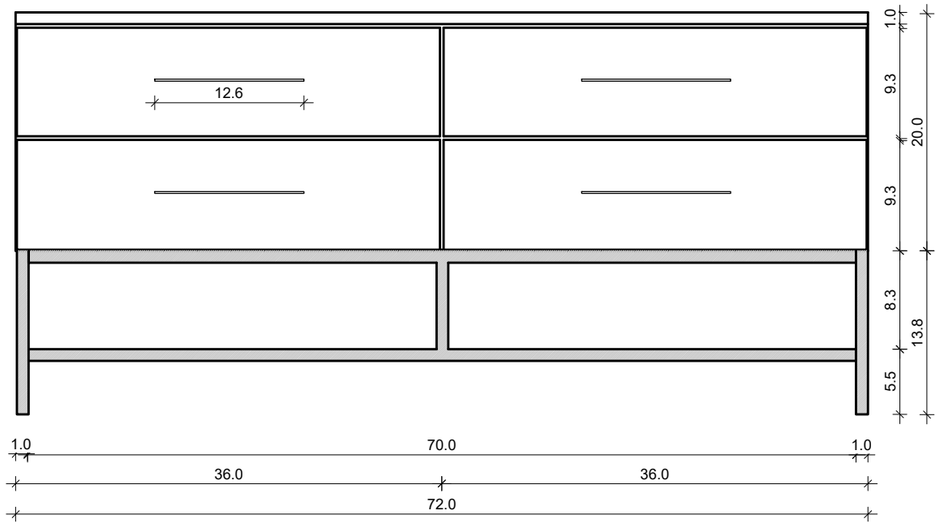

FRONT VIEW

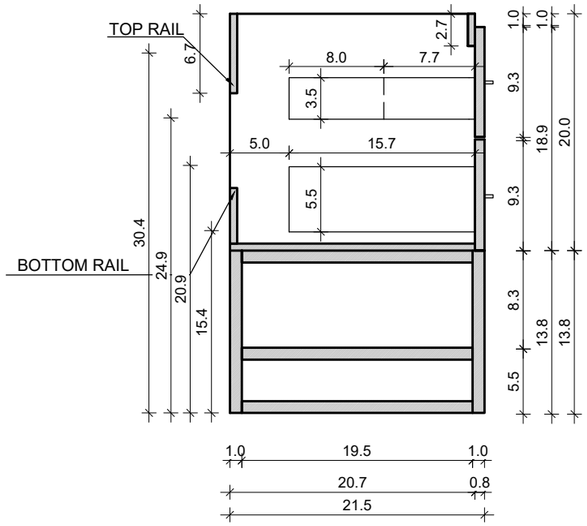

SIDE VIEW

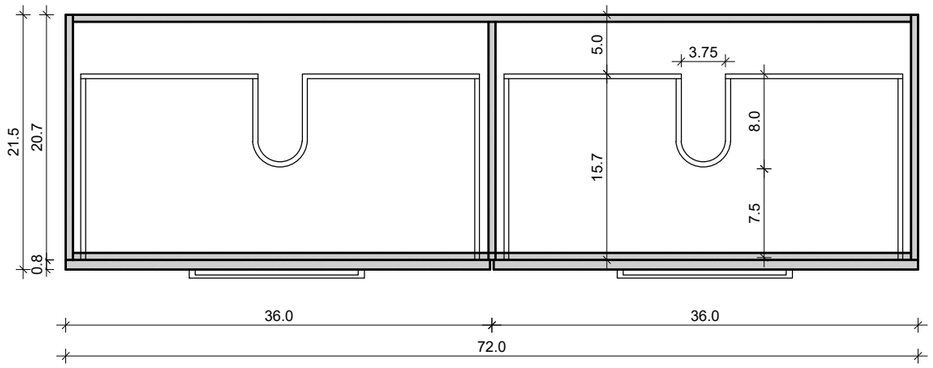

TOP VIEW

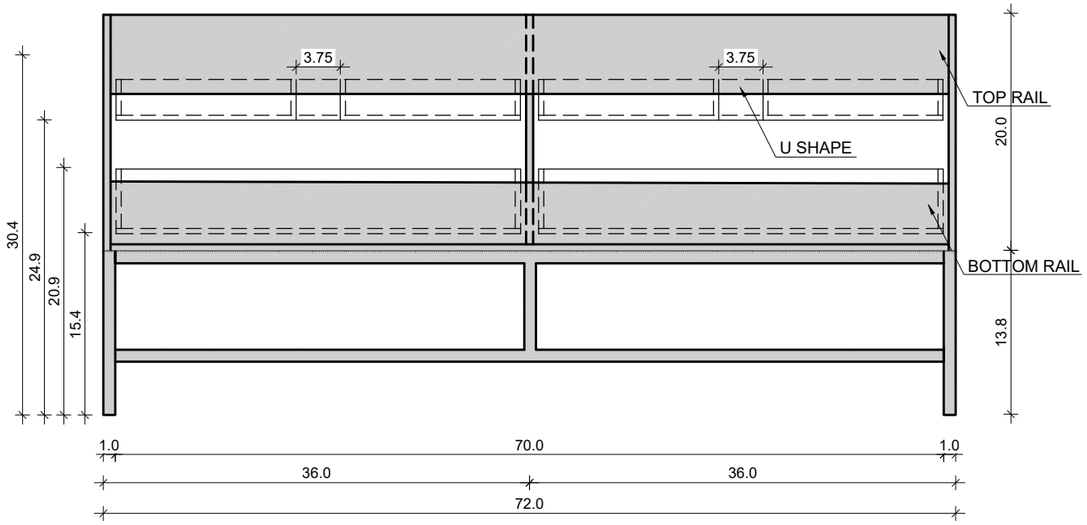

BACK VIEW