Jupiter 30

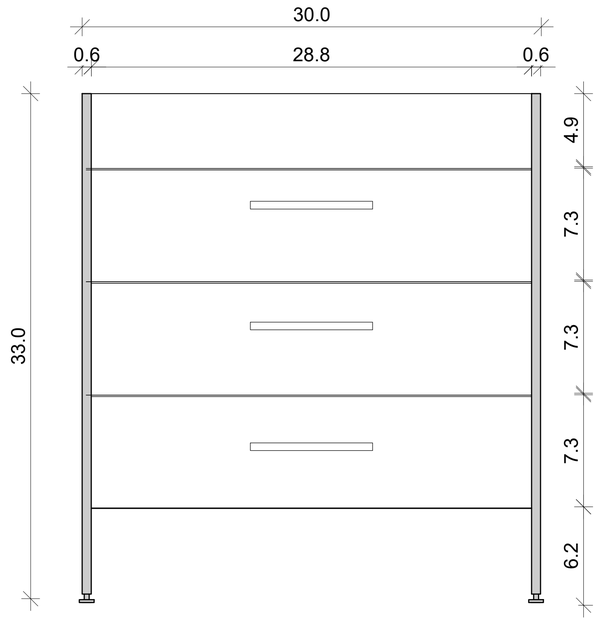

Front View

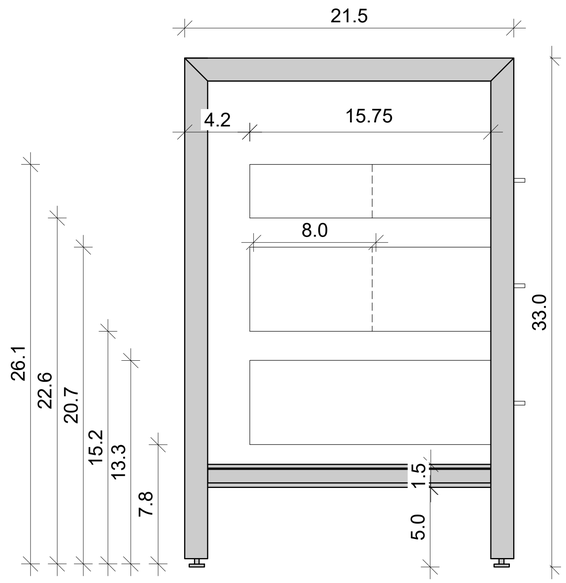

Side View

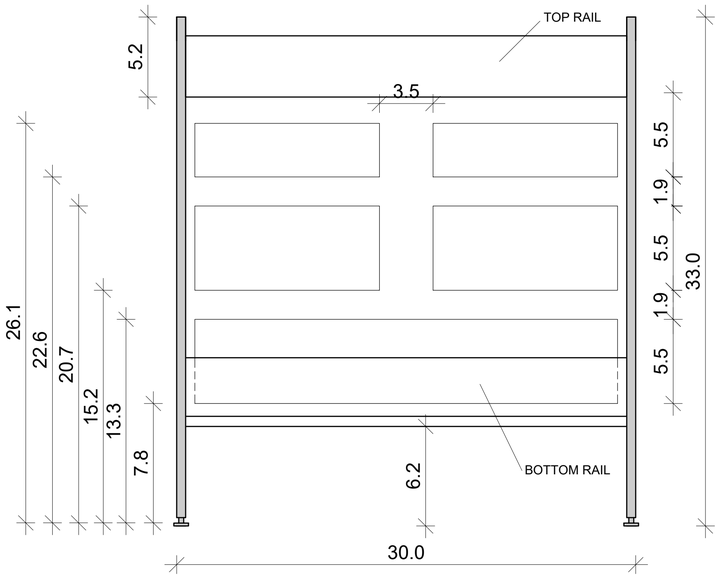

Back View

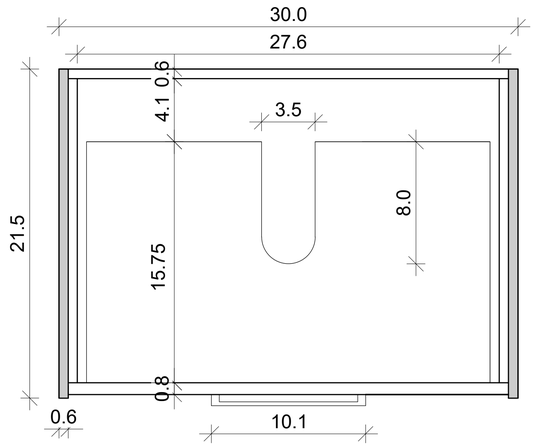

Top View