UPTOWN 60-24

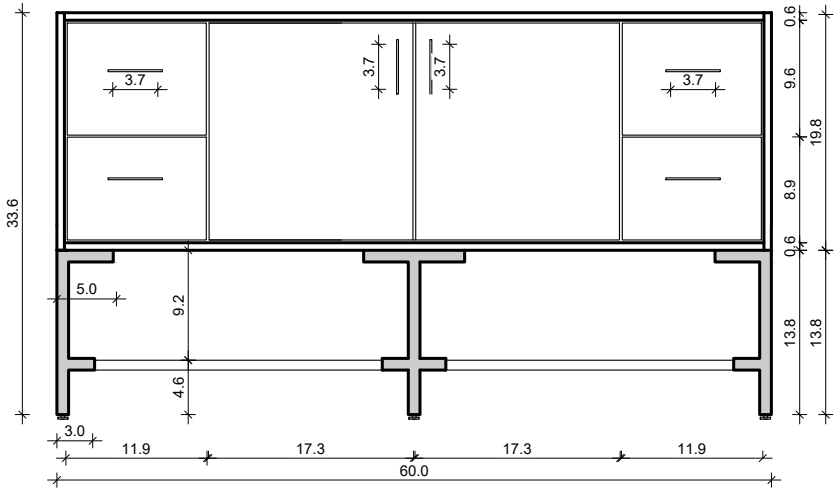

FRONT VIEW

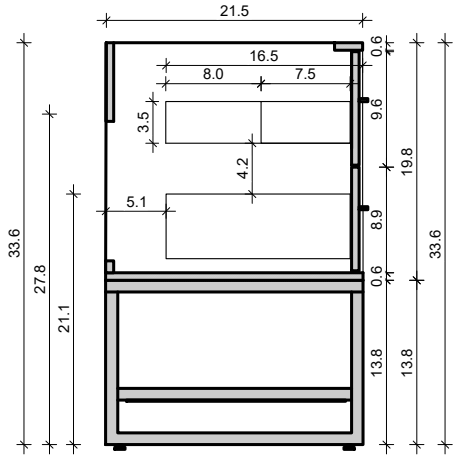

SIDE VIEW

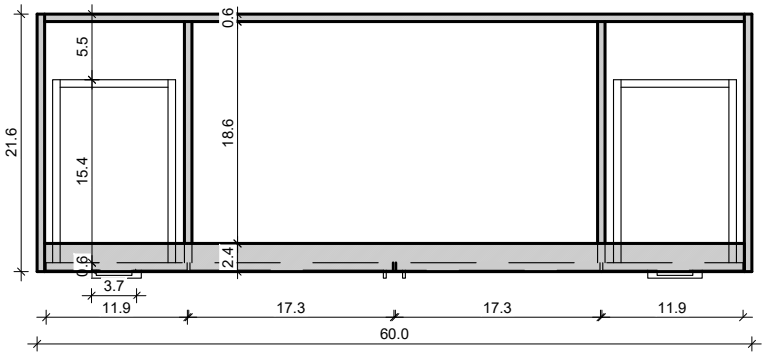

TOP VIEW

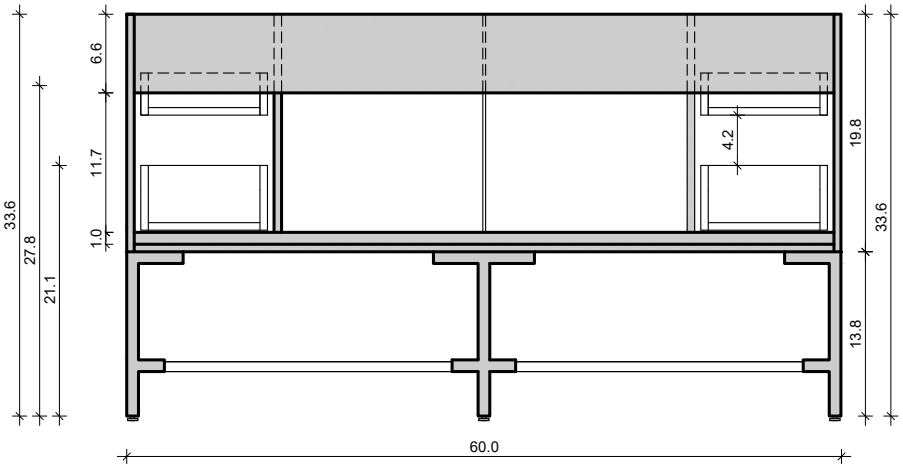

BACK VIEW